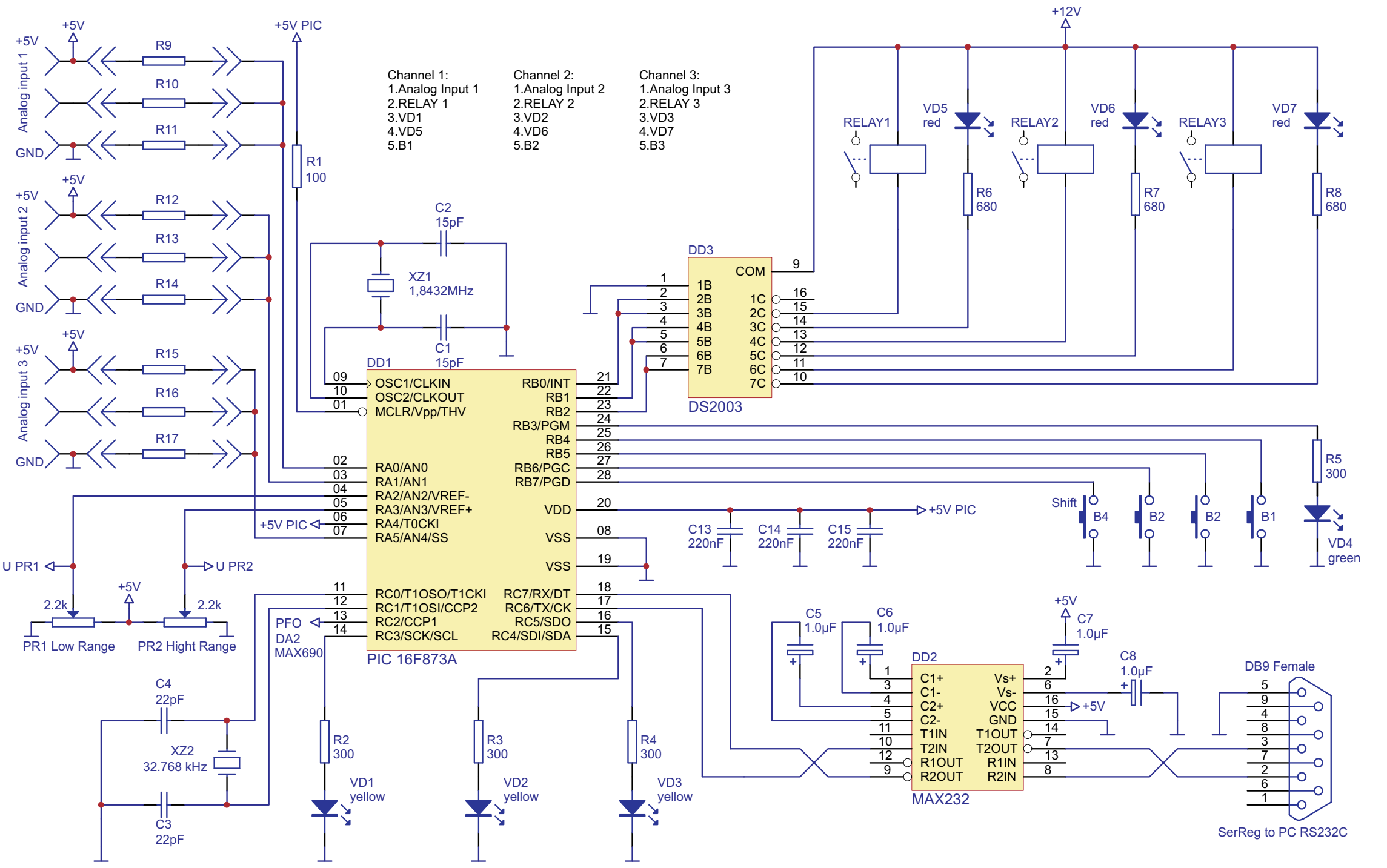

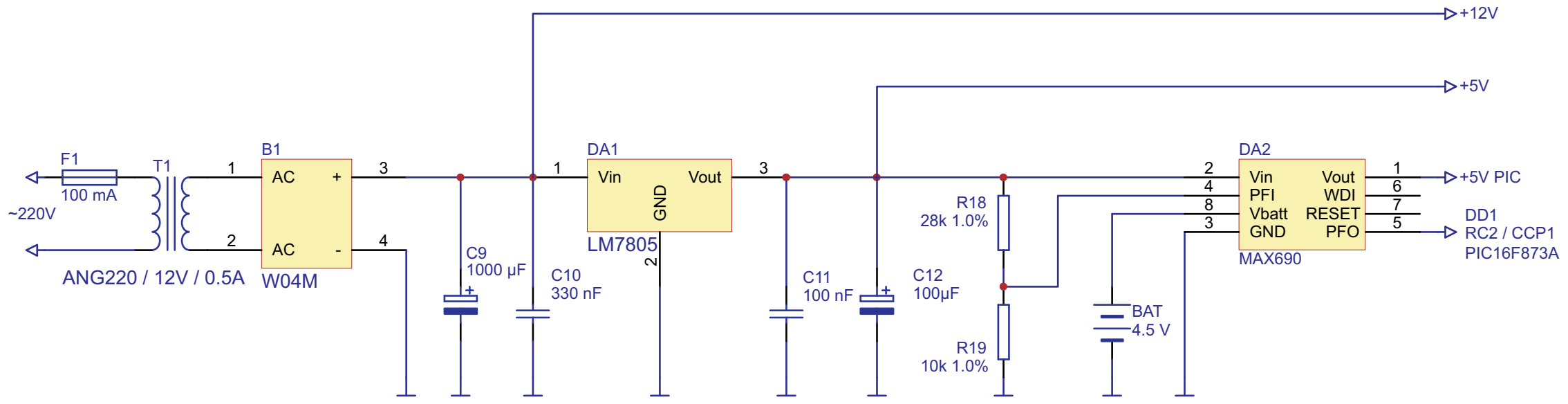

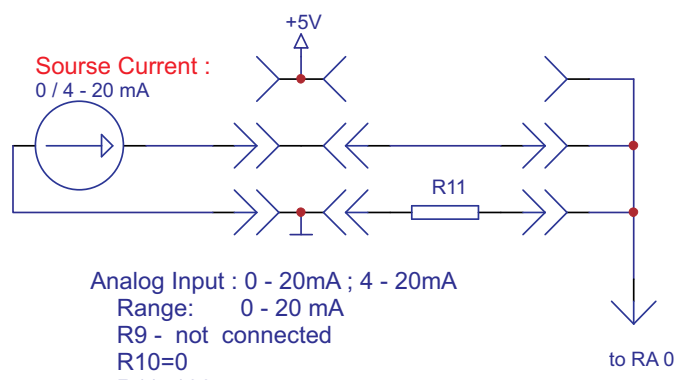

Analog Input : 0 - 20mA ; 4 - 20mA
Range: 0 - 20 mA
R9 - not connected
R10=0
R11=100
U PR1=0V
U PR2=2.0V
Range: 4 - 20 mA
R9 - not connected
R10=0
R11=100
U PR1=0.4V
U PR2=2.0V

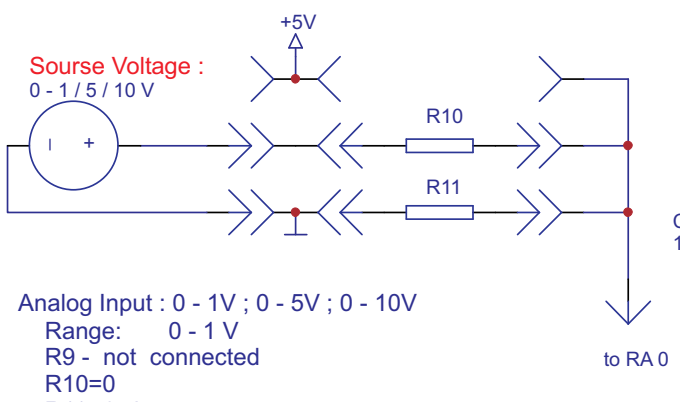

Analog Input : 0 - 1V ; 0 - 5V ; 0 - 10V
Range: 0 - 1 V
R9 - not connected
R10=0
R11=4.7k
U PR1=0V
U PR2=1.0V
Range: 0 - 5 V
R9 - not connected
R10=1.8k
R11=10k
U PR1=0V
U PR2=4.23V
Range: 0 - 10 V
R9 - not connected
R10=15k
R11=10k
U PR1=0V
U PR2=4.0V

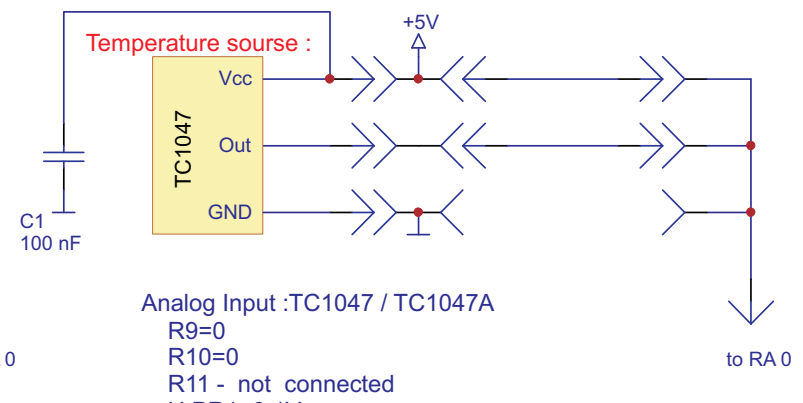

Analog Input :TC1047 / TC1047A
R9=0
R10=0
R11 - not connected
U PR1=0.1V
U PR2=1.75V
Range: -40 +125 C
Use Analog Configuration Tool - linear mode
See also TC1046 / LM 50 / ADT 50

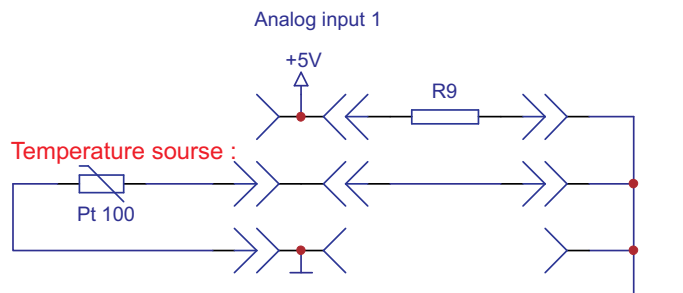

Analog Input : Platinum (Pt 100) - two wire connection
R9=3.7k
R10=0
R11 - not connected
U PR1=0.11V
U PR2=0.39V
Range: -50 +600 C
Use Analog Configuration Tool - nonlinear mode

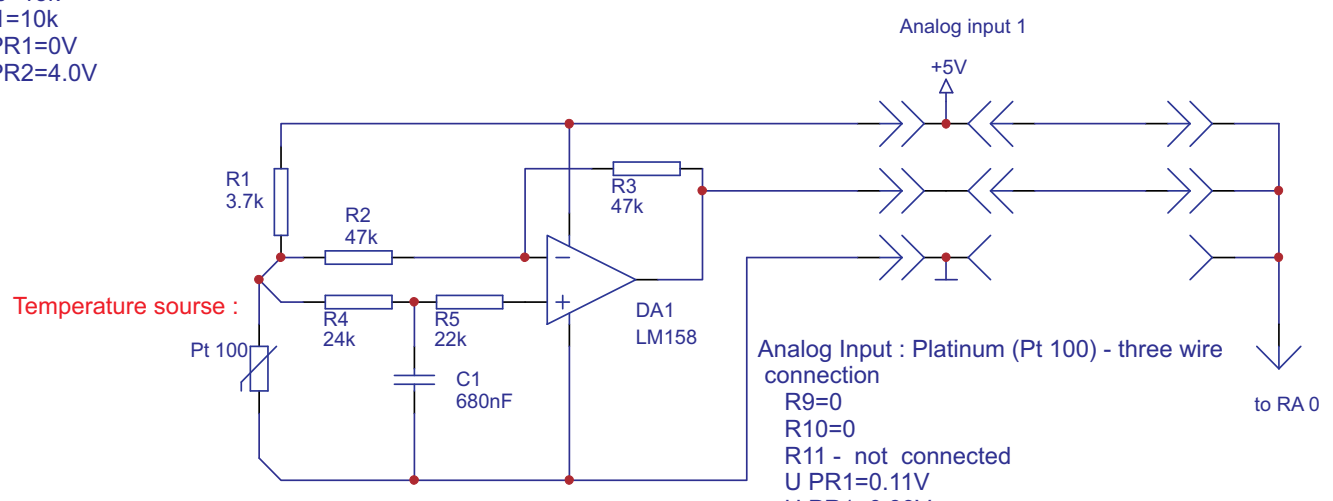

Analog Input : Platinum (Pt 100) - three wire connection
R9=0
R10=0
R11 - not connected
U PR1=0.11V
U PR1=0.39V
Range: -50 +600 C
Use Analog Configuration Tool - nonlinear mode

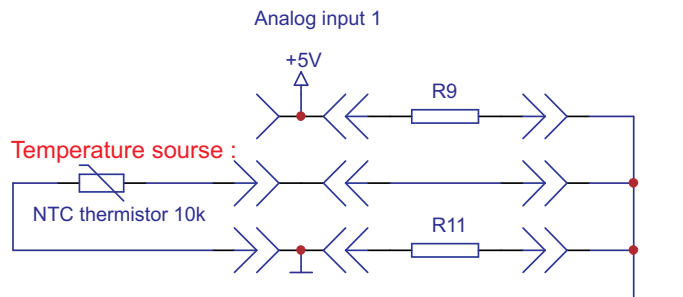

Analog Input : NTC thermistor 10k with a linearization shunt resistor
R9=18k
R10=0
R11=5.17k linearization resistor
U PR1=0.29V
U PR2=0.99V
Range: 0 +70 C
Use Analog Configuration Tool - nonlinear mode

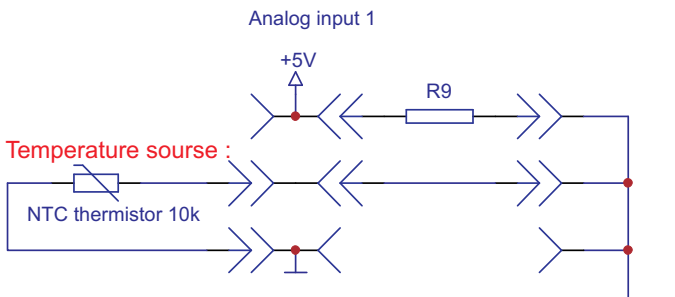

Analog Input : NTC thermistor 10k
R9=15k
R10=0
R11 - not connected
U PR1=0.75V
U PR2=3.5V
Range: 0 +70 C
Use Analog Configuration Tool - nonlinear mode

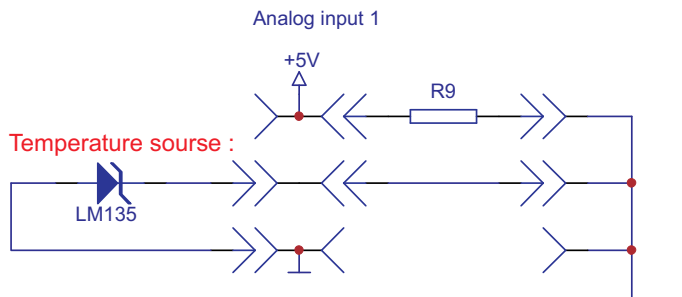

Analog Input : LM135 / LM235 / LM335
R9=1.2k
R10=0
R11 - not connected
U PR1=2.33V
U PR2=3.98V
Range: -40 +125 C
Use Analog Configuration Tool - linear mode